Rev	AWO #	Description	Date	Appr
		SEE SHT 1 OF 2 REVISION		

APPROVED: _____

DATE: _____ TITLE: _____

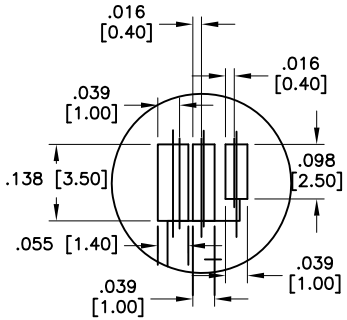

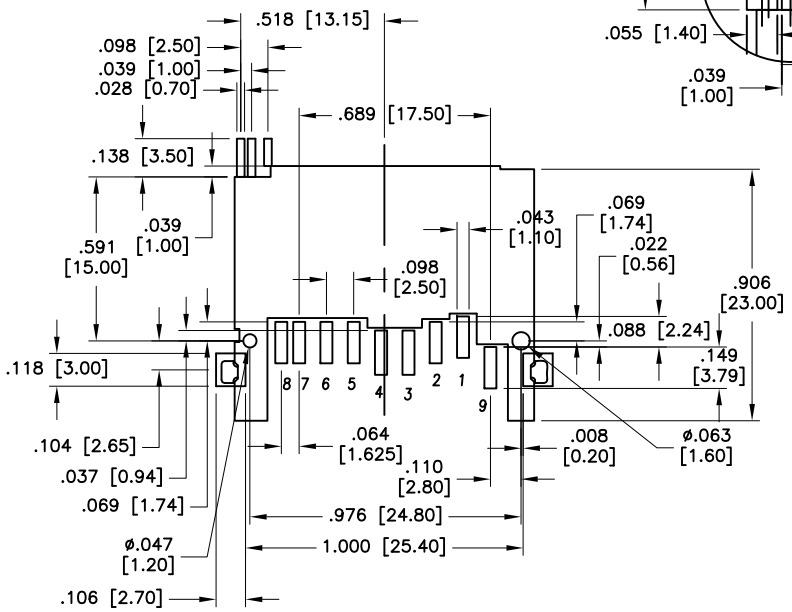

RECOMMENDED PCB LAYOUT

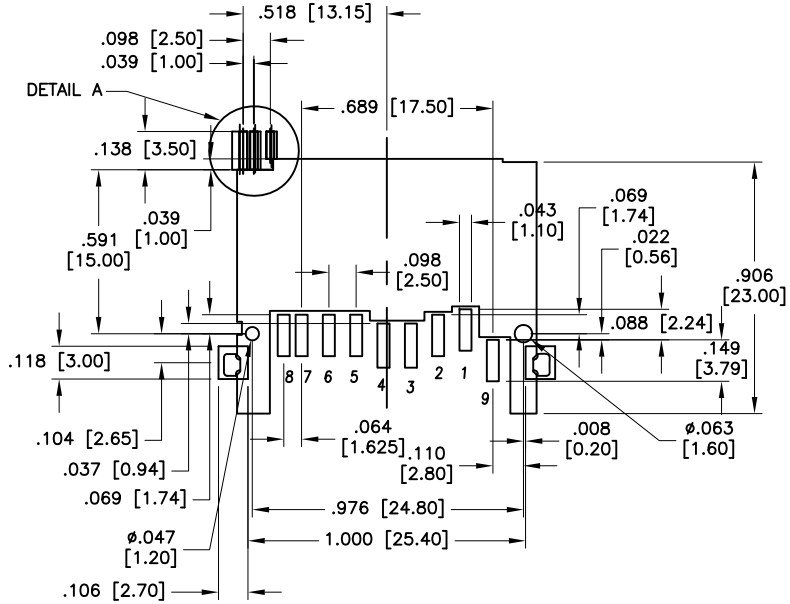

RECOMMENDED PCB LAYOUT

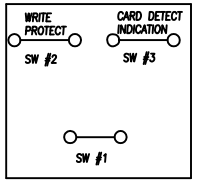

WITHOUT CARD

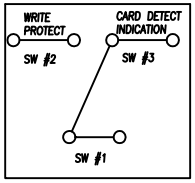

CARD INSERTED
WRITF PROTFCT : LOCK

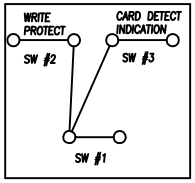

CARD INSERTED
WRITF PROTFCT : UNLOCK

SD CARD PIN ASIGN	
PIN	NAME
1	CD/DAT3
2	CMD/DI
3	VSS1
4	VDD
5	CLK/SCLK
6	VSS2
7	DAT0
8	DAT1
9	DAT2

UNLESS OTHERWISE SPECIFIED
ALL DIMENSIONS ARE INCHES [MM]
TOLERANCES: EXCEPT AS NOTED

INCHES		HOLES	
.X	± .10	Ø.X	±.10
.XX	± .020	Ø.XX	±.015
.XXX	± .015	Ø.XXX	±.010

APPROVALS		DATE
DRAWN	DY	3/02/09
CHECKED		
APPROVED		

ADAM TECH
909 Rahway Avenue, Union, NJ 07083
Phone: 908-687-5000 Fax: 908-687-5710

TITLE: SD SOCKET, TOP MOUNT
10u" SELECTIVE GOLD

SIZE	PART NO.	REV.
X	SD-09-B-SG-10	-

REF: S00009T | SCALE: NTS | SHEET 2 OF 2