Rev	AWO #	Description	Date	Appr
-		RELEASED	10/04/10	

APPROVED: _____

DATE: _____ TITLE: _____

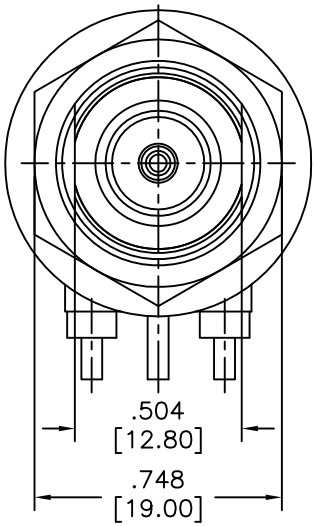

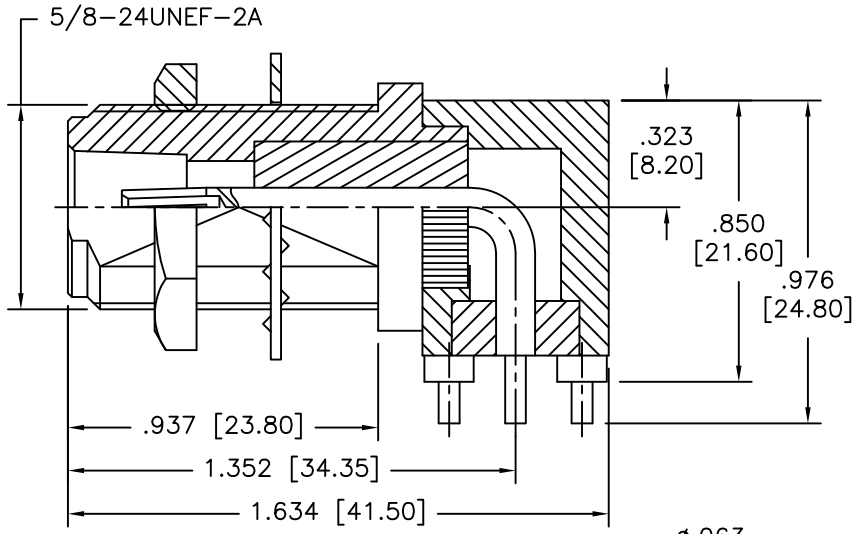

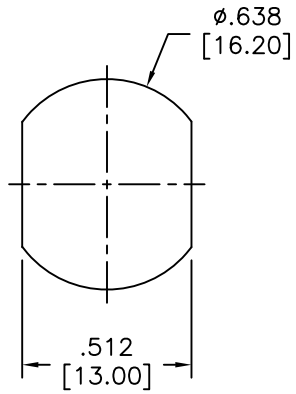

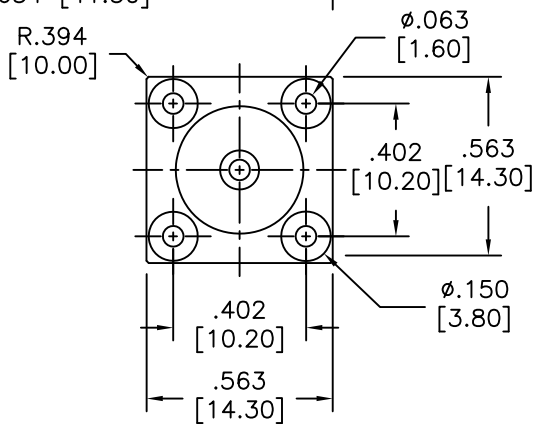

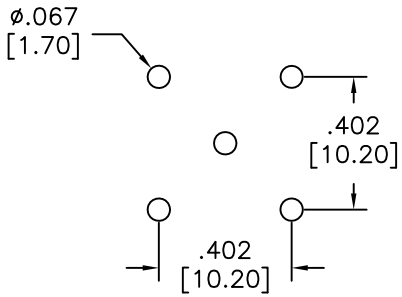

RECOMMENDED MOUNTING HOLE

DESCRIPTION	MATERIAL	FINISH
HEX NUT	BRASS	NICKEL
LOCK WASHTER	PHOSPHOR BRONZE	NICKEL
LEG	BRASS	GOLD
INSULATOR	TEFLON	NATURAL
OUTER BODY	BRASS	GOLD
CONTACT PIN	PHOSPHOR BRONZE	NICKEL
INSULATOR	TEFLON	NATURAL
INNER BODY	BRASS	GOLD

SPECIFICATIONS:
Environmental:
Lead free, RoHS compliant.

RoHS COMPLIANT

UNLESS OTHERWISE SPECIFIED
ALL DIMENSIONS ARE INCHES [MM]
TOLERANCES: EXCEPT AS NOTED

INCHES		HOLES	
.X	± .10	Ø.X	±.10
.XX	± .020	Ø.XX	±.015
.XXX	± .015	Ø.XXX	±.010

APPROVALS		DATE
DRAWN	DY	10/04/10
CHECKED		
APPROVED		

ADAM TECH
909 Rahway Avenue, Union, NJ 07083
Phone: 908-687-5000 Fax: 908-687-5710

TITLE
N-TYPE, R/A, P.C.B BULKHEAD JACK

SIZE	PART NO.	REV.
X	RF5-500-5-HDW	-

REF: S00132T | SCALE: NTS | SHEET 1 OF 1