Rev	AWO #	Description	Date	Appr
-	10663	RELEASED	12/20/10	

APPROVED: _____

DATE: _____ TITLE: _____

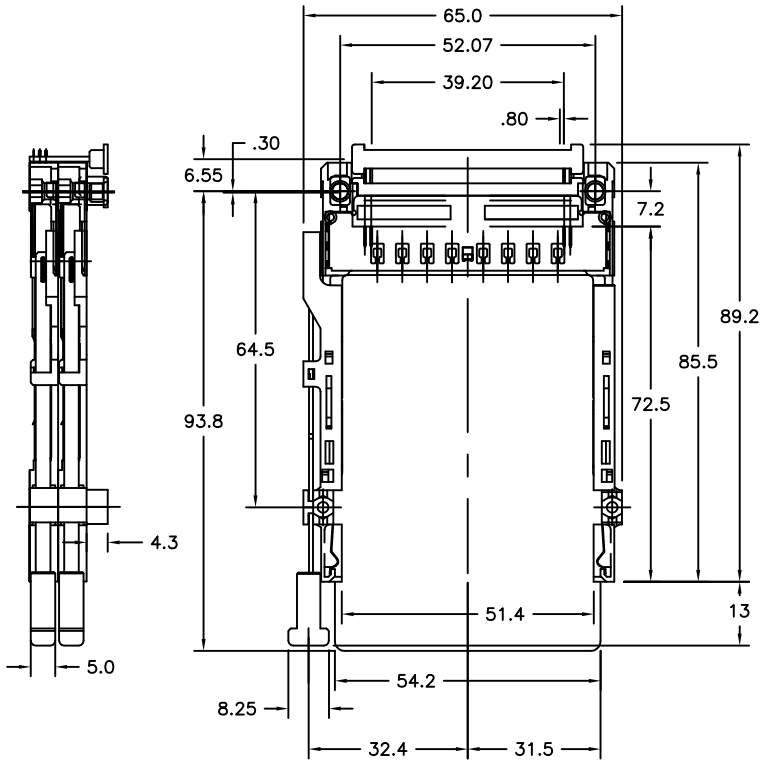

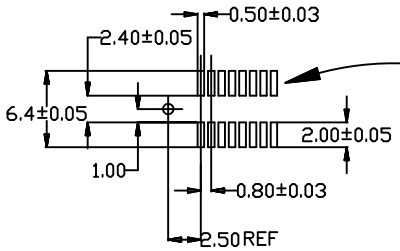

SCALE 2:1

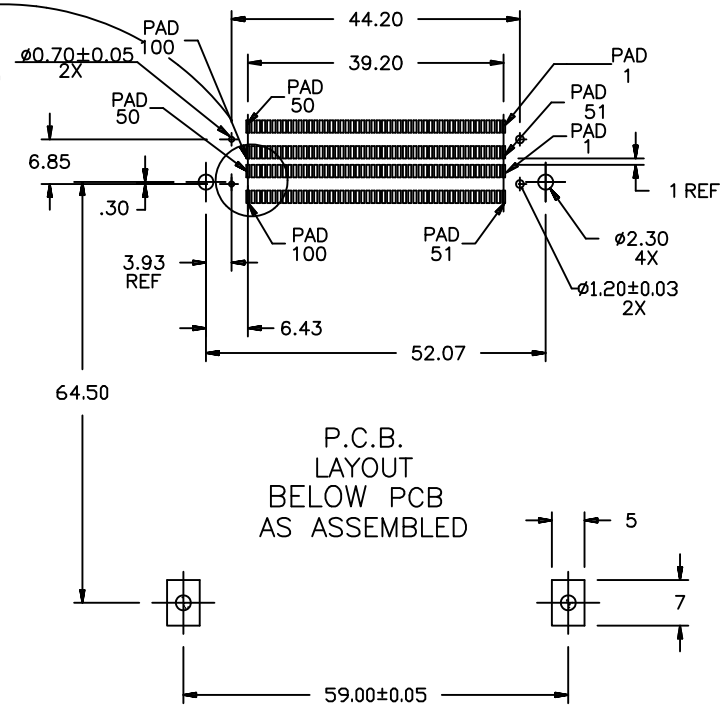

P.C.B.
LAYOUT
BELOW PCB
AS ASSEMBLED

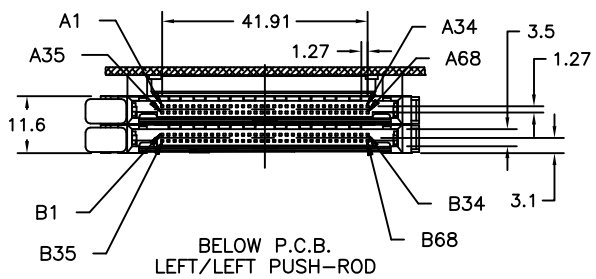

BELOW P.C.B.
LEFT/LEFT PUSH-ROD

SPECIFICATIONS:
Environmental:
Lead free, RoHS compliant

RoHS COMPLIANT

UNLESS OTHERWISE SPECIFIED
ALL DIMENSIONS ARE MM
TOLERANCES: EXCEPT AS NOTED

INCHES		HOLES	
.X	± .10	Ø.X	±.10
.XX	± .020	Ø.XX	±.015
.XXX	± .015	Ø.XXX	±.010

APPROVALS		DATE
DRAWN	DY	12/20/10
CHECKED		
APPROVED		

ADAM TECH
909 Rahway Avenue, Union, NJ 07083
Phone: 908-687-5000 Fax: 908-687-5710

TITLE
CARDBUS EJECT ASS'Y SMT TYPE

SIZE	PART NO.	REV.
X	PCMCIA-C-68-SMT-A10663-2	-

REF: A69999 | SCALE: NTS | SHEET 1 OF 1