Rev	AWO #	Description	Date	Appr
SEE SHT 1 OF 2 FOR REVISION				

APPROVED: _____

DATE: _____ TITLE: _____

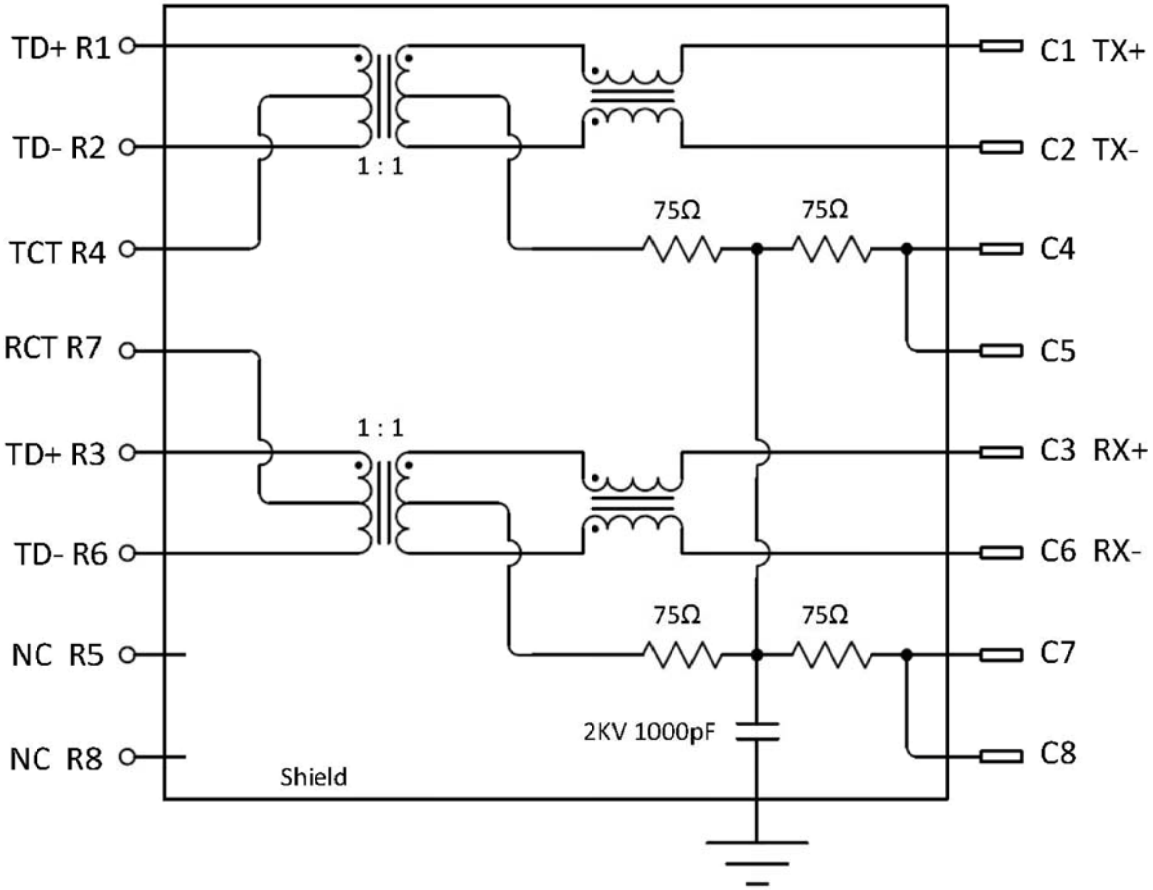

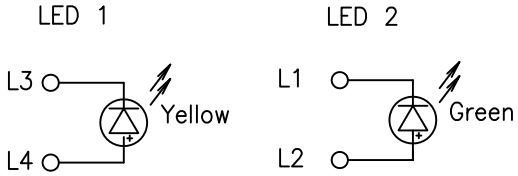

SPECIFICATIONS:
Transmitter filter &Receiver filter
Type:Balance low pass 100Ω impedance
Insertion loss: 1~100MHz–1.0dB MAX.
Return loss: 1~30MHz–18dB MIN. load 100Ω
30~60MHz–16dB MIN. load 100Ω
60~80MHz–12dB MIN. load 100Ω
80~100MHz–10dB MIN. load 100Ω
Common Mode Rejection
@1~100MHz–30dB MIN.
Cross Talk
@1~100MHz–30dB MIN.
INDUCTANCE@100KHz, 0.1V, 8mA DC BIAS
Input(R1–R2),Input(R3–R6):350uH MIN.
HiPot TEST
Input(R1–R2) to Output(C1–C2):1500 VAC, 60sec or 2250VDC, 60sec
Input(R3–R6) to Output(C3–C6):1500 VAC, 60sec or 2250VDC, 60sec

UNLESS OTHERWISE SPECIFIED
ALL DIMENSIONS ARE MM
TOLERANCES: EXCEPT AS NOTED

		HOLES	
.X	± .10	Ø.X	±.10
.XX	± .020	Ø.XX	±.015
.XXX	± .015	Ø.XXX	±.010

APPROVALS		DATE
DRAWN	DY	7/21/10
CHECKED		
APPROVED		

ADAM TECH
909 Rahway Avenue, Union, NJ 07083
Phone: 908-687-5000 Fax: 908-687-5710

TITLE: MODULAR JACK GANGED, 2 PORT, 8P8C W/LED1 YELLOW, LED2 GREEN

SIZE	PART NO.	REV.
X	MTJG-2-88SX1-FSD-LG-M14	-

REF: S00073T | SCALE: NTS | SHEET 2 OF 2