Rev	AWO #	Description	Date	Appr
-	10113	RELEASED	9/30/10	

APPROVED: _____

DATE: _____ TITLE: _____

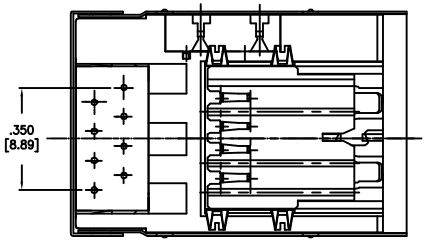

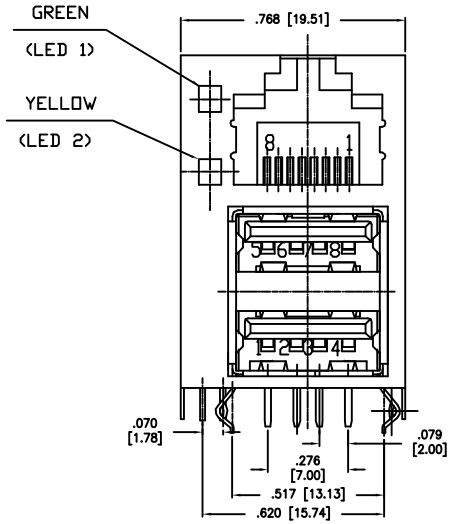

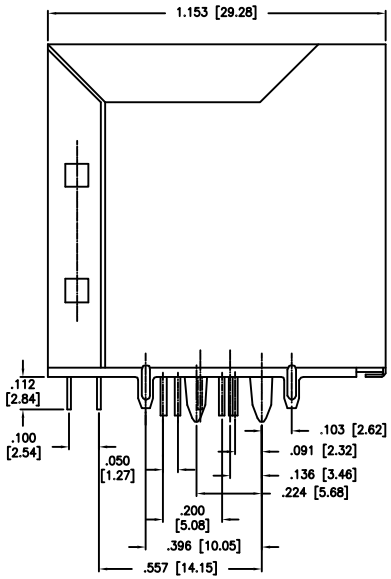

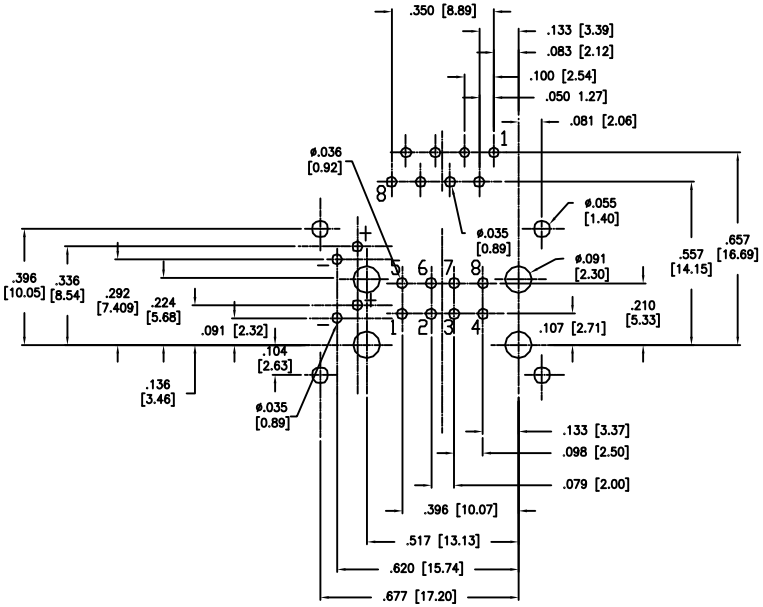

RECOMMENDED PCB LAYOUT

SPECIFICATIONS:

Material:

Insulator: PBT, glass reinforced, rated UL 94V-0
Insulator color: Black
Contacts: Phopsphor Bronze
Shield: Copper Alloy, Nickel plated

Contact Plating:

Gold Flash over Nickel underplate on contact area,
Tin over Copper underplate on tails

Electrical:

RJ45:
Contact Current Rating: 1.5 Amp
Contact Resistance: 35m ohm Max
Insulation Resistance: 1000 Mohm min @ 500 VDC
Dielectric Withstanding Voltage: 1000VAC Min

USB:
Contact Current Rating: 1 Amp
Contact Resistance: 30m ohm Max
Insulation Resistance: 1000M ohm Min @ 500 VDC
Dielectric Withstanding Voltage: 750 VAC Min

Temperature Rating:

Operating temperature: 0°C to +70°C

Environmental:

Lead free, RoHS compliant.
Recommended soldering temp: 235°C for 5 sec.

RoHS COMPLIANT

X	PLATING
0	15 µin Gold
1	30 µin Gold
2	50 µin Gold

UNLESS OTHERWISE SPECIFIED
ALL DIMENSIONS ARE INCHES [MM]
TOLERANCES: EXCEPT AS NOTED

INCHES		HOLES	
.X	± .10	Ø.X	±.10
.XX	± .020	Ø.XX	±.015
.XXX	± .015	Ø.XXX	±.010

APPROVALS		DATE
DRAWN	AY	9/30/10
CHECKED	AW	9/30/10
APPROVED		

ADAM TECH
909 Rahway Avenue, Union, NJ 07083
Phone: 908-687-5000 Fax: 908-687-5710

TITLE: MODULAR JACK 8P8C & DUAL USB GANGED W/ LED1 GREEN, LED2 YELLOW

SIZE	PART NO.	REV.
X	MTJ-DUSB-88JX1-FS-SLH	-

REF: S00005C | SCALE: NTS | SHEET 1 OF 1