Rev	AWO #	Description	Date	Appr
-		RELEASED	6/29/11	

APPROVED: _____

DATE: _____ TITLE: _____

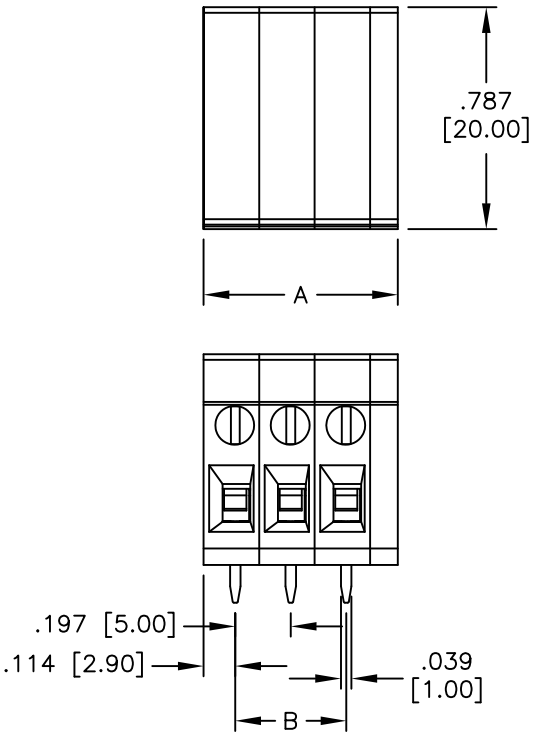

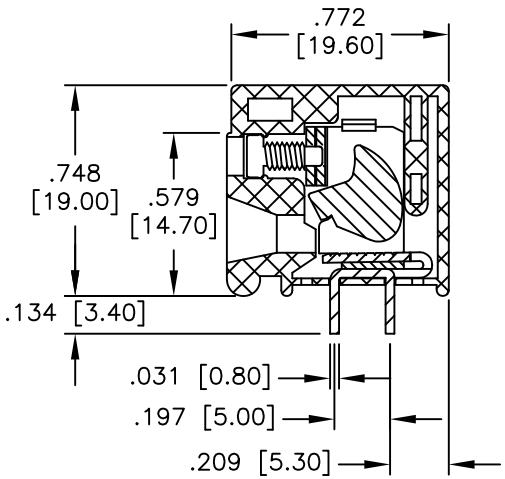

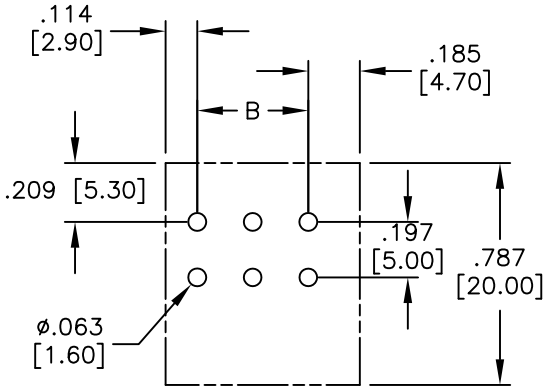

RECOMMENDED PCB LAYOUT

SPECIFICATIONS:

Material:
Insulator: Thermoplastic, rated UL 94V-0
Insulator color: Green
Screw: M2.5, Steel, Zn plated.
Contact: Brass, Tin plated.
Electrical:
Operation voltage: 300 VAC
Current rating: 20 Amps
Withstanding Voltage: 1.6KV
Mechanical:
Wire strip length: 10-11mm
Torque (Lb-In): 2.4
Wire Range: 12-22 Awg
Environmental:
Operating temperature: -40°C to +115°C
Lead free, RoHS compliant.
Recommended soldering temp: 235°C for 5 sec.

RoHS COMPLIANT

Poles: 1 thru 24
A = .197 [5.00] X No. of Positions + .098 [2.50]
B = .197 [5.00] X No. of Spaces

UNLESS OTHERWISE SPECIFIED
ALL DIMENSIONS ARE MM [INCHES]
TOLERANCES: EXCEPT AS NOTED

INCHES		HOLES	
.X	± .10	Ø.X	±.10
.XX	± .020	Ø.XX	±.015
.XXX	± .015	Ø.XXX	±.010

APPROVALS		DATE
DRAWN	DY	6/29/11
CHECKED		
APPROVED		

ADAM TECH
909 Rahway Avenue, Union, NJ 07083
Phone: 908-687-5000 Fax: 908-687-5710

TITLE
EURO BLOCK, 197 [5.00] PITCH

SIZE	PART NO.	REV.
X	EB14-XX-1	-

REF: S00007T | SCALE: NTS | SHEET 1 OF 1