Rev	AWO #	Description	Date	Appr
SEE SHT 1 OF 2 FOR REVISION				

APPROVED: _____

DATE: _____ TITLE: _____

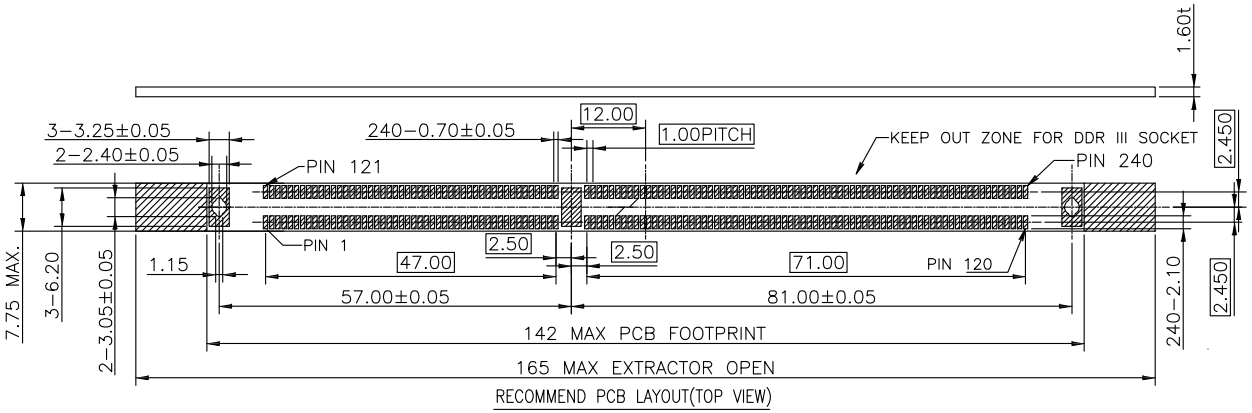

RECOMMEND PCB LAYOUT(TOP VIEW)

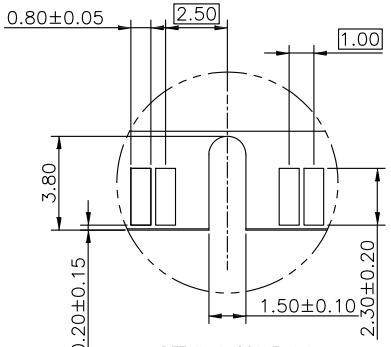

DETAIL A SCALE 4:1

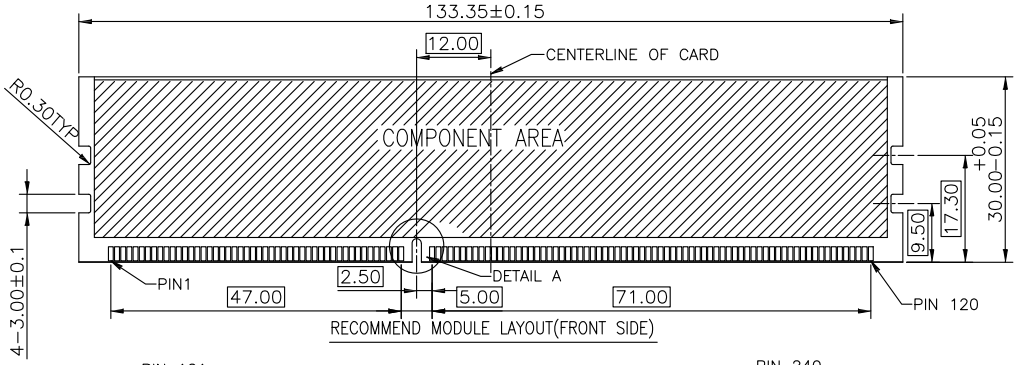

RECOMMEND MODULE LAYOUT(FRONT SIDE)

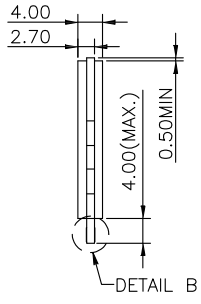

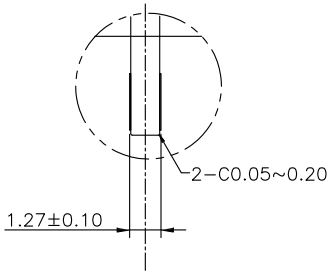

DETAIL B SCALE 4:1

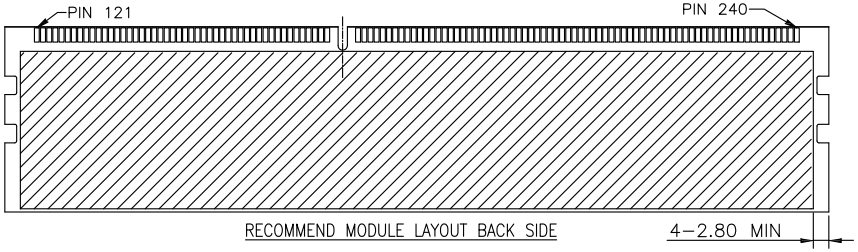

RECOMMEND MODULE LAYOUT BACK SIDE

UNLESS OTHERWISE SPECIFIED
ALL DIMENSIONS ARE MM
TOLERANCES: EXCEPT AS NOTED

INCHES		HOLES	
.X	± .10	Ø.X	±.10
.XX	± .020	Ø.XX	±.015
.XXX	± .015	Ø.XXX	±.010

APPROVALS		DATE
DRAWN	DY	4/29/10
CHECKED		
APPROVED		

ADAM TECH
909 Rahway Avenue, Union, NJ 07083
Phone: 908-687-5000 Fax: 908-687-5710

TITLE
DDR3 SOCKET, 240P, VERTICAL ,SMT, 1.5V KEY

SIZE	PART NO.	REV.
X	DDR-240-V-4-SMT	-

REF: S00152T | SCALE: NTS | SHEET 2 OF 2