Ordering Information pg. 9

TYPE E
4P4C

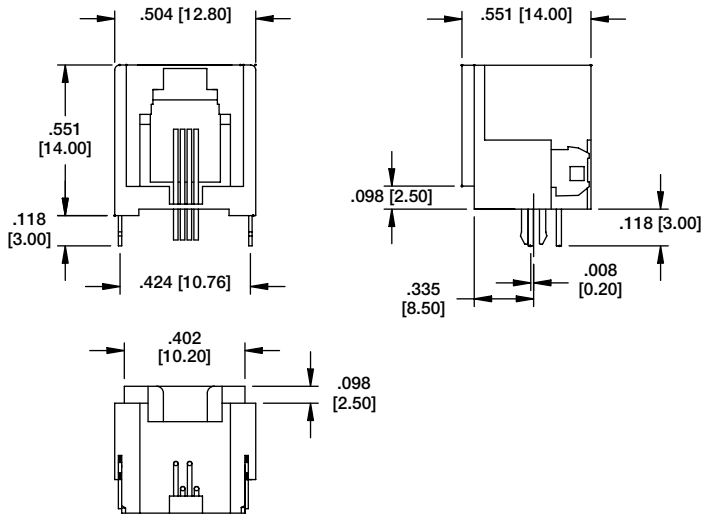

MTJ-44EX1

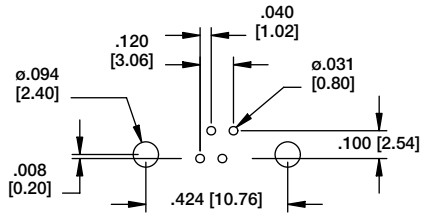

Recommended PCB Layout

TYPE E
6P4C
6P6C

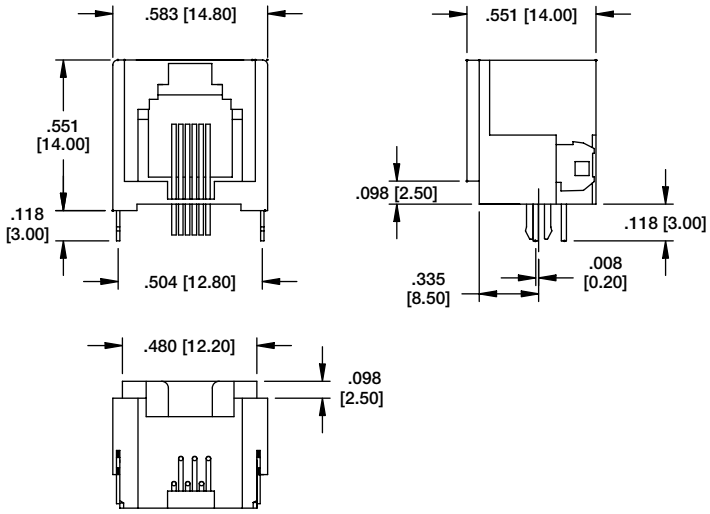

MTJ-66EX1

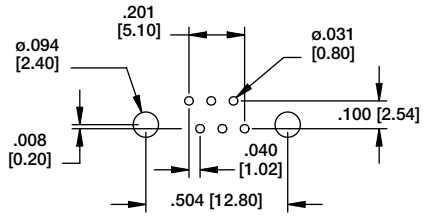

Recommended PCB Layout

TYPE E
8P8C

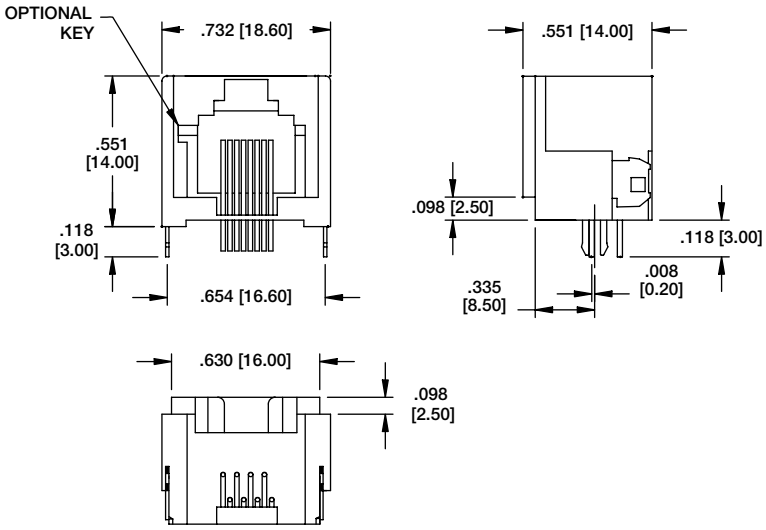

MTJ-88EX1

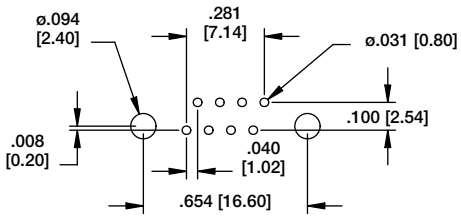

Recommended PCB Layout