.100" MINI SHUNTS

.100" [2.54] CENTERLINE

MS SERIES

MSA
.100"

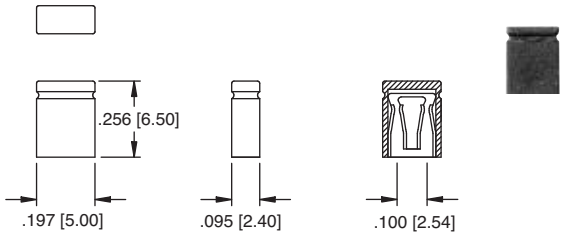

MSB
.100"

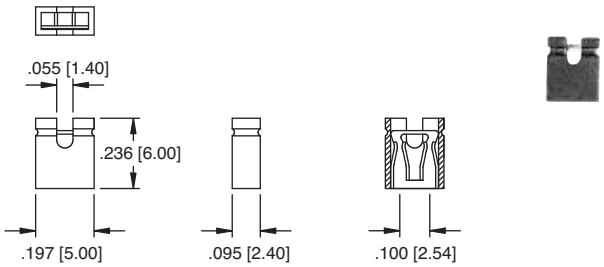

MSC
.100"

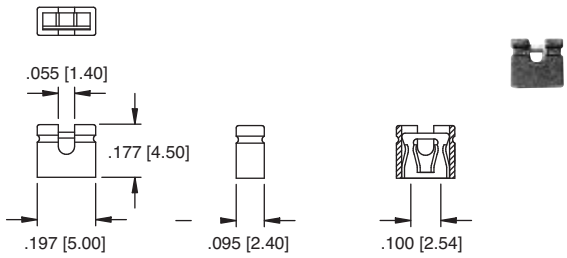

MSDA
.100"

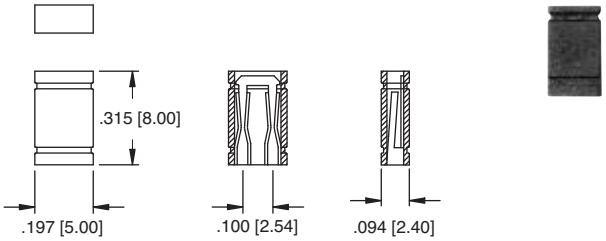

MSDB
.100"

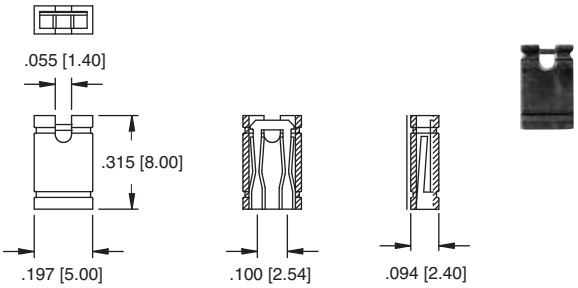

MSBH
.100"

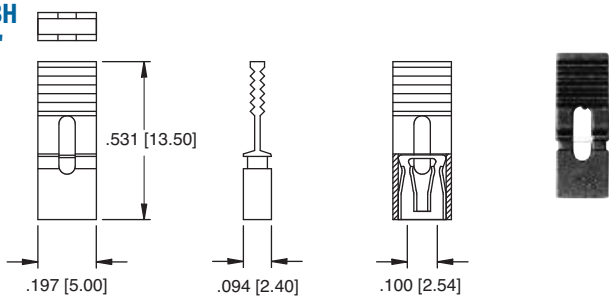

HMSA (1 X 2)
.050"

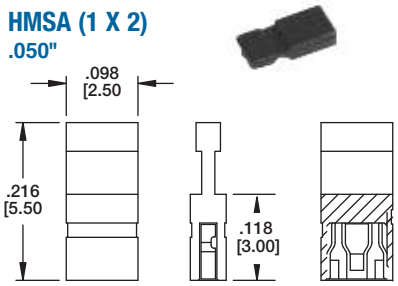

HMSB (2 X 2)
.050"

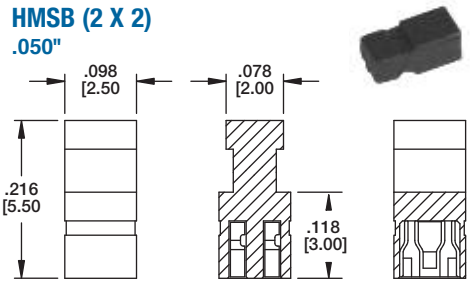

MSE
.200" 3P JUMPER

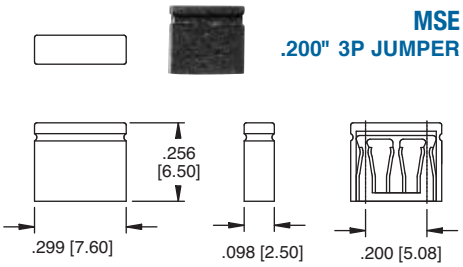

MSBG
.100" GANGED BLOCK

A - .100 [2.54] X No of Positions
B = .100 [2.54] X No of Spaces

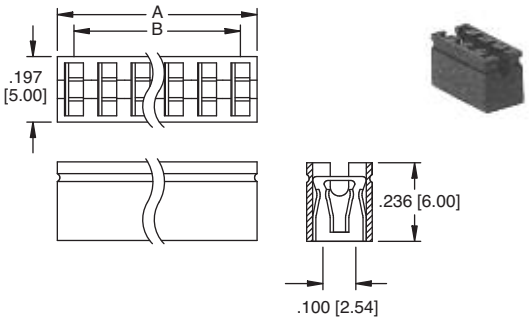

MST
.100"
10 pc.
STRIP

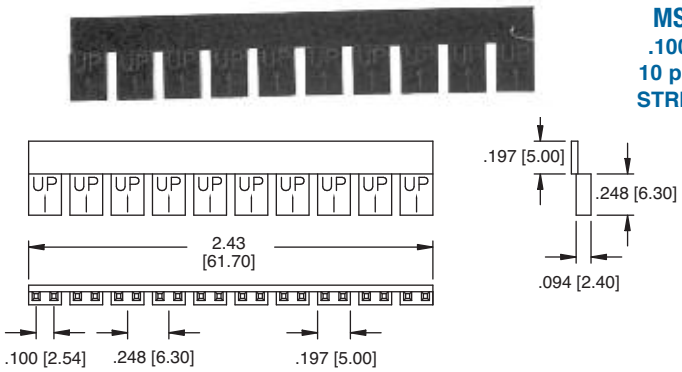

909 Rahway Avenue • Union, New Jersey 07083 • T: 908-687-5000 • F: 908-687-5710 • WWW.ADAM-TECH.COM